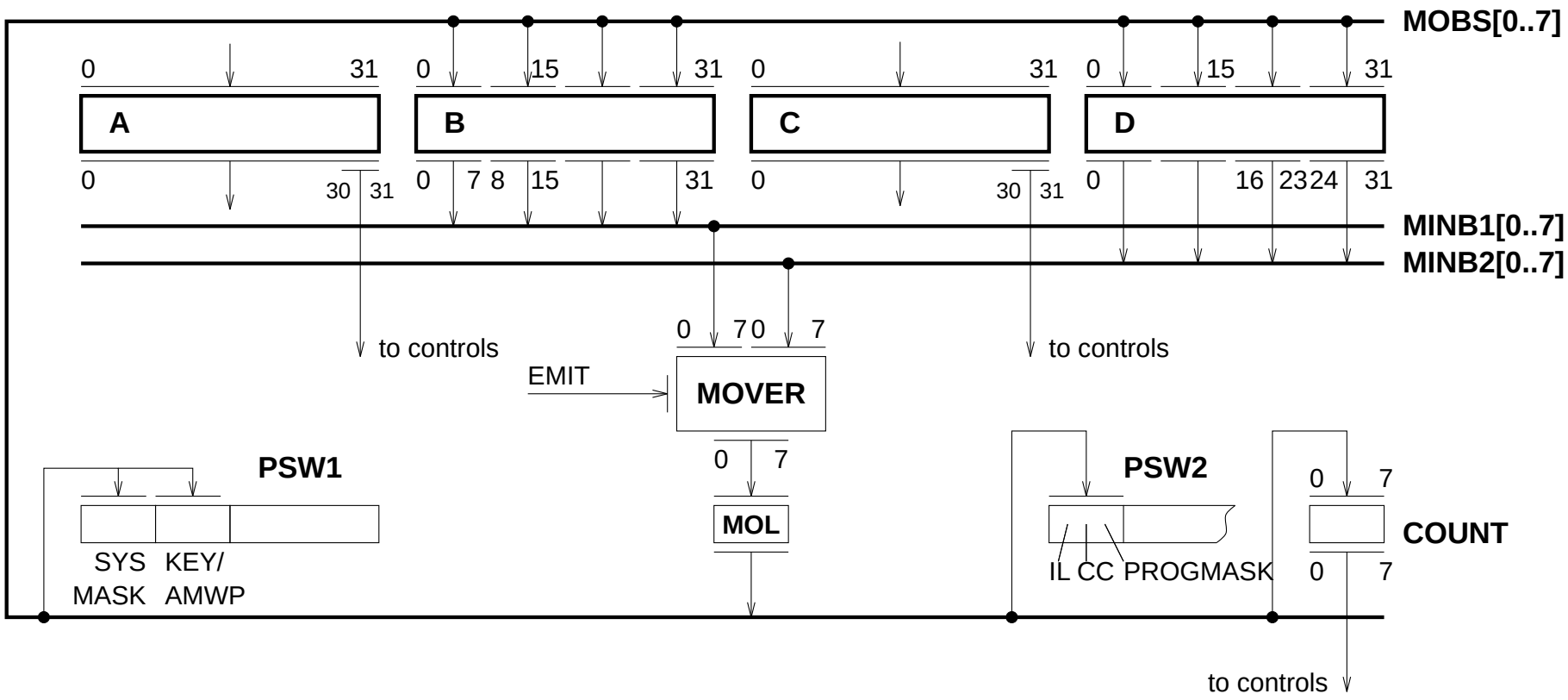
MOBS[0..7]
0
31
A
B
C
D
15
30
7
8
16
23
24
MINB1[0..7]
MINB2[0..7]
to controls
EMIT
MOVER
MOL
PSW1
SYS MASK
KEY/ AMWP
PSW2
IL CC PROGMASK
COUNT